# AXIS A4020-E Reader

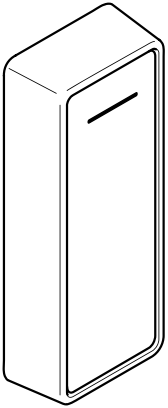

# Installation Guide

## Read this first

Read through this Installation Guide carefully before installing the product. Keep the Installation Guide for future reference.

## Liability

Every care has been taken in the preparation of this document. Please inform your local Axis office of any inaccuracies or omissions. Axis Communications AB cannot be held responsible for any technical or typographical errors and reserves the right to make changes to the product and manuals without prior notice. Axis Communications AB makes no warranty of any kind with regard to the material contained within this document, including, but not limited to, the implied warranties of merchantability and fitness for a particular purpose. Axis Communications AB shall not be liable nor responsible for incidental or consequential damages in connection with the furnishing, performance or use of this material. This product is only to be used for its intended purpose.

## Intellectual property rights

Axis AB has intellectual property rights relating to technology embodied in the product described in this document. In particular, and without limitation, these intellectual property rights may include one or more of the patents listed at *axis.com/patent* and one or more additional patents or pending patent applications in the US and other countries.

## Equipment modifications

This equipment must be installed and used in strict accordance with the instructions given in the user documentation. This equipment contains no user-serviceable components. Unauthorized equipment changes or modifications will invalidate all applicable regulatory certifications and approvals.

## Trademark acknowledgements

AXIS COMMUNICATIONS, AXIS, ARTPEC and VAPIX are registered trademarks of Axis AB in various jurisdictions. All other trademarks are the property of their respective owners.

## Regulatory information

**Europe**

This product complies with the applicable CE marking directives:

- Electromagnetic Compatibility (EMC) Directive 2014/30/EU. See *Electromagnetic compatibility (EMC) on page 2*.
- Radio Equipment Directive (RED) 2014/53/EU. See *Radio transmission on page 3*.
- Low Voltage Directive (LVD) 2014/35/EU. See *Safety on page 5*.
- Restriction of Hazardous Substances (RoHS) Directive 2011/65/EU and 2015/863, including any amendments, updates or replacements. See *Disposal and recycling on page 5*.

A copy of the original declaration of conformity may be obtained from Axis Communications AB. See *Contact information on page 6*.

## Electromagnetic compatibility (EMC)

This equipment has been designed and tested to fulfill applicable standards for:

- Radio frequency emission when installed according to the instructions and used in its intended environment.
- Immunity to electrical and electromagnetic phenomena when installed according to the instructions and used in its intended environment.

USA

This device complies with part 15 of the FCC Rules. Operation is subject to the following two conditions:

1. This device may not cause harmful interference, and
2. this device must accept any interference received, including interference that may cause undesired operation.

This equipment has been tested and found to comply with the limits for a Class B digital device, pursuant to part 15 of the FCC Rules. These limits are designed to provide reasonable protection against harmful interference in a residential installation. This equipment generates, uses and can radiate radio frequency energy and, if not installed and used in accordance with the instructions, may cause harmful interference to radio communications. However, there is no guarantee that interference will not occur in a particular installation. If this equipment does cause harmful interference to radio or television reception, which can be determined by turning the equipment off and on, the user is encouraged to try to correct the interference by one or more of the following measures:

- Reorient or relocate the receiving antenna.
- Increase the separation between the equipment and receiver.
- Connect the equipment into an outlet on a circuit different from that to which the receiver is connected.
- Consult the dealer or an experienced radio/TV technician for help.

The product shall be properly grounded.

**Contact information**
Axis Communications Inc.
300 Apollo Drive
Chelmsford, MA 01824
United States of America
Tel: +1 978 614 2000

**Canada**
This digital apparatus complies with CAN ICES-3 (Class B). The product shall be properly grounded. Cet appareil numérique est conforme à la norme CAN NMB-3 (classe B). Le produit doit être correctement mis à la terre.

**Europe**
This digital equipment fulfills the requirements for RF emission according to the Class B limit of EN 55032. The product shall be properly grounded.

**Australia/New Zealand**
This digital equipment fulfills the requirements for RF emission according to the Class B limit of AS/NZS CISPR 32. The product shall be properly grounded.

**Japan**
この装置は、クラスB機器です。この装置は、住宅環境で使用することを目的としていますが、この装置がラジオやテレビジョン受信機に近接して使用されると、受信障害を引き起こすことがあります。取扱説明書に従って正しい取り扱いをして下さい。 VCCI-B

**Korea**
이 기기는 가정용(B급) 전자파적합기기로서 주로 가정에서 사용하는 것을 목적으로 하며, 모든 지역에서 사용할 수 있습니다. 제품은 적합하게 접지 되어야 합니다.

상호: AXIS COMMUNICATIONS AB

기자재명칭 : Card Reader

모델명 : AXIS A4020-E

제조연월 : 2021년 06월

제조자, 제조국가: AXIS COMMUNICATIONS AB / 폴란드

## Radio transmission

This equipment may generate or use radio frequency energy. The user could lose the authority to operate this equipment if an unauthorized change or modification is made.

Transmitter operates at 13.553–13.567 MHz with measured maximum field strength 15.63 dBµA/m @3m.

**USA**

This product complies with FCC radiation exposure limits for an uncontrolled environment.

**Canada**
This device complies with Innovation, Science and Economic Development Canada licence-exempt RSS standard(s). Operation is subject to the following two conditions: (1) this device may not cause interference, and (2) this device must accept any interference, including interference that may cause undesired operation of the device.
This device complies with IC radiation exposure limits for an uncontrolled environment.

Le présent appareil est conforme aux CNR Innovation, Sciences et Développement économique Canada applicables aux appareils radio exempts de licence. L'exploitation est autorisée aux deux conditions suivantes : (1) l'appareil ne doit pas produire de brouillage, et (2) l'utilisateur de l'appareil doit accepter tout brouillage radioélectrique subi, même si le brouillage est susceptible d'en compromettre le fonctionnement.
Ce produit est conforme aux limites d'exposition aux radiations IC pour un environnement non contrôlé.

**Europe**
Hereby, Axis Communications AB declares that this product is in compliance with the essential requirements and other relevant provisions of Directive 2014/53/EU.

**FR**
Par la présente Axis Communications AB déclare que l'appareil ce produit est conforme aux exigences essentielles et aux autres dispositions pertinentes de la directive 2014/53/UE.

**DE**
Hiermit erklärt Axis Communications AB, dass sich dieses Produkt in Übereinstimmung mit den grundlegenden Anforderungen und den anderen relevanten Vorschriften der Richtlinie 2014/53/EU befindet.

**IT**
Con la presente Axis Communications AB dichiara che questo prodotto è conforme ai requisiti essenziali ed alle altre disposizioni pertinenti stabilite dalla direttiva 2014/53/UE.

**ES**
Por medio de la presente Axis Communications AB declara que el este producto cumple con los requisitos esenciales y cualesquiera otras disposiciones aplicables o exigibles de la Directiva 2014/53/UE.

**FI**
Axis Communications AB vakuuttaa täten että tämä tuote tyyppinen laite on direktiivin 2014/53/EU oleellisten vaatimusten ja sitä koskevien direktiivin muiden ehtojen mukainen.

**NL**
Hierbij verklaart Axis Communications AB dat het toestel in overeenstemming is met

de essentiële eisen en de andere relevante bepalingen van richtlijn 2014/53/EU.

**SV**
Härmed intygar Axis Communications AB att denna produkt står i överensstämmelse med de väsentliga egenskapskrav och övriga relevanta bestämmelser som framgår av direktiv 2014/53/EU.

**DA**
Undertegnede Axis Communications AB erklærer herved, at følgende udstyr overholder de væsentlige krav og øvrige relevante krav i direktiv 2014/53/EU.

**PT**
Axis Communications AB declara que este produto está conforme com os requisitos essenciais e outras disposições da Directiva 2014/53/UE.

**EL**
Με την παρούσα η Axis Communications AB δηλώνει ότι αυτό το προϊόν συμμορφώνεται προς τις ουσιώδεις απαιτήσεις και τις λοιπές σχετικές διατάξεις της οδηγίας 2014/53/ΕΕ.

This equipment can be used in the following countries:

AT, BE, BG, CH, CY, CZ, DE, DK, EE, EL, ES, FI, FR, HR, HU, IE, IS, IT, LI, LT, LU, LV, MT, NL, NO, PL, PT, RO, SE, SI, SK, TR, UK

**Australia/New Zealand**
This digital equipment fulfills the requirements of the Radio Communications Standard AS/NZS 4771.

**Korea**
해당무선설비는운용중전파혼신가능성이있음로인명안전과 관련된 서비스는할 수없습니다

**Taiwan**
取得審驗證明之低功率射頻器材，非經核准，公司、商號 或使用者均不得擅自變更頻率、加大功率或變更原設計之特 性及功能。低功率射頻器材之使用不得影響飛航安全及干擾 合法通信；經發現有干擾現象時，應立即停用，並改善至無 干擾時方得繼續使用。前述合法通信，指依電信管理法規定 作業之無線電通信。低功率射頻器材須忍受合法通信或工業 、科學及醫療用電波輻射性電機設備之干擾。

**Japan**
本製品は、特定無線設備の技術基準適合証明を受けています。

**Brazil**
Este produto está homologado pela ANATEL, de acordo com os procedimentos regulamentados pela Resolução 242/2000 e atende aos requisitos técnicos aplicados.

ANATEL 12611-21-05509

Este equipamento não tem direito a proteção contra interferência prejudicial e não pode causar interferência em sistemas devidamente autorizados.

Para maiores informações, consulte o site da ANATEL www.anatel.gov.br.

**Mexico**

La operación de este equipo está sujeta a las siguientes dos condiciones:

1. Es posible que este equipo o dispositivo no cause interferencia perjudicial.
2. Este equipo o dispositivo debe aceptar cualquier interferencia. Incluyendo la que pueda causar su operación no deseada.

**Thailand**

nanb.

เครื่องวิทยุคมนาคมนี้ ได้รับยกเว้น ไม่ต้องได้รับใบอนุญาตให้มี ใช้ซึ่งเครื่องวิทยุคมนาคม หรือตั้งสถานีวิทยุคมนาคมตามประกาศ กสทช. เรื่อง เครื่องวิทยุคมนาคม และสถานีวิทยุคมนาคมที่ได้รับยกเว้นไม่ต้องได้รับใบอนุญาต วิทยุคมนาคม ตามพระราชบัญญัติวิทยุคมนาคม พ.ศ. 2498

nanb. โทรคมนาคม
กำกับดูแลเพื่อประชาชน
Call Center 1200 (โทรฟรี)

**Hongkong**

Certified for use in Hong Kong
經驗證可在香港使用
Certificate No. 證書號碼
HK0022100105

通訊事務管理局
COMMUNICATIONS AUTHORITY

## Safety

This product complies with IEC/EN/UL 62368-1, safety of audio/video and IT equipment, and IEC/EN/UL 60950-22, Safety of Information Technology Equipment.

## Disposal and recycling

When this product has reached the end of its useful life, dispose of it according to local laws and regulations. For information about your nearest designated collection point, contact your local authority responsible for waste disposal. In accordance with local legislation, penalties may be applicable for incorrect disposal of this waste.

**Europe**

This symbol means that the product shall not be disposed of together with household or commercial waste. Directive 2012/19/EU on waste electrical and electronic equipment (WEEE) is applicable in the European Union member states. To prevent potential harm to human health and the environment, the product must be disposed of in an approved and environmentally safe recycling process. For information about your nearest designated collection point, contact your local authority responsible for waste disposal. Businesses should contact the product supplier for information about how to dispose of this product correctly.

This product complies with the requirements of Directive 2011/65/EU and 2015/863 on the restriction of the use of certain hazardous substances in electrical and electronic equipment (RoHS).

**China**

This product complies with the requirements of SJ/T 11364-2014, Marking for the restriction of hazardous substances in electrical and electronic products.

| 有毒有害物质或元素 | | | | | | |
|---|---|---|---|---|---|---|
| 部件名称 | 铅(Pb) | 汞(Hg) | 镉(Cd) | 六价铬(Cr(VI)) | 多溴联苯(PBB) | 多溴二苯醚(PBDE) |
| 电气实装部分 | X | 0 | 0 | 0 | 0 | 0 |

0: 表示该有毒有害物质在该部件均质材料中的含量均在GB/T 26572标准规定的限量要求以下。

X: 表示该有毒有害物质至少在该部件的某一均质材料中的含量超出GB/T 26572标准规定的限量要求。

**Taiwan**

Declaration of the Presence Condition of the Restricted Substances Marking.

限用物質含有情況標示

| 設備名稱：讀卡機 型號（型式）：AXIS A4020-E | | | | | | |
|---|---|---|---|---|---|---|
| 單元 | 限用物質及其化學符號 | | | | | |
| | 鉛(Pb) | 汞(Hg) | 鎘(Cd) | 六價鉻($Cr^{+6}$) | 多溴聯苯(PBB) | 多溴二苯醚(PBDE) |
| 電路板 | - | ○ | ○ | ○ | ○ | ○ |

| | | | | | | |
|---|---|---|---|---|---|---|
| 外殼 | ○ | ○ | ○ | ○ | ○ | ○ |
| 積體電路 | - | ○ | ○ | ○ | ○ | ○ |

備考1. 〝超出0.1 wt %〞及〝超出0.01 wt %〞係指限用物質之百分比含量超出百分比含量基準值。

備考2. 〝○〞係指該項限用物質之百分比含量未超出百分比含量基準值。

備考3. 〝 - 〞係指該項限用物質為排除項目。

## Contact information

Axis Communications AB
Gränden 1
223 69 Lund
Sweden

Tel: +46 46 272 18 00
Fax: +46 46 13 61 30

*axis.com*

**Taiwan**

品名: 讀卡機

型式: AXIS A4020-E

額定輸入: 12V

製造國別: 波蘭

委託商: Axis Communications

1:

進口商: 零壹科技股份有限公司

地址: 台北市內湖路一段360巷8號10樓

電話: (02)2656-5656

2:

進口商: 精技電腦股份有限公司

地址: 台北市內湖區新湖二路236號3樓

電話: (02)2796-2345

## Warranty information

For information about Axis' product warranty and thereto related information, go to *axis.com/warranty*.

## Support

Should you require any technical assistance, please contact your Axis reseller. If your questions cannot be answered immediately, your reseller will forward your queries through the appropriate channels to ensure a rapid response. If you are connected to the Internet, you can:

- find answers to resolved problems in the FAQ database, search by product, category, or phrase
- report problems to Axis support staff by logging in to your private support area
- chat with Axis support staff
- visit Axis Support at *axis.com/support*

## Learn more!

Visit Axis learning center *axis.com/learning* for useful trainings, webinars, tutorials and guides.

## Requirements for compliance with UL294 7th edition

This section contains information and instructions required for UL compliance. To make sure the installation is UL compliant, follow the instructions below in addition to the general information and instructions provided throughout this document. In cases where pieces of information contradict each other, the requirements for UL compliance always replace general information and instructions.

For use with the UL294 listed AXIS A1601 Network Door Controller.

*Safety instructions*

- The Axis product shall be installed and serviced by a factory trained professional.
- All wiring methods shall be performed in accordance with ANSI/NFPA 70, local codes and authorities having jurisdiction.
- Recommended test method: Verify that the card reader reads cards and provides access.
  Test frequency: once a year.
- There are no replacement parts available for this product.
- For UL294 compliant installations the AXIS A4020-E Reader should be powered by either an AXIS A1601 Network Door Controller or a UL294 listed power supply. All interconnecting devices shall be UL listed and Class 2 low-voltage power limited.
- DC input evaluated for UL294: 12 V DC
- Max current: 100 mA
- Max wiring length: 1000 m (3281 ft)

*Impaired operation*

The following conditions could result in impaired operation of the reader:

The reader can have difficulties reading cards at very low temperatures. The access cards are normally specified to -35° C (-31° F) and should be

warmed up if the reader is installed in cold surroundings. The reader can only read one card at a time. Sheet metal behind the access card can result in impaired antenna function and prevent the reader from reading the card. Too low voltage will impair the function of the reader.

*Firmware version*

AXIS A4020-E Reader has been tested for compatibility with the UL294-listed AXIS A1601 Network Door Controller employing major firmware version 1. Equivalent to other Axis door controllers with major firmware version 1, as well as UL component version 1 in other Axis door controller firmwares.

**Performance levels for access control**

This section contains performance level information required for UL 294 compliance.

| Feature | Level |
|---|---|
| Destructive attack test | I |
| Security | I |
| Endurance | IV |
| Standby power | I |

## Wire area

Note

Each wire shall have a conductor cross-sectional area that corresponds to an conductor gauge range of AWG 22–18. Select cables in compliance with your local regulations.

| AWG | Diameter mm (in) | Area $mm^2$ |
|---|---|---|
| 22–18 | 0.405–1.024 (0.0159–0.0403) | 0.129–0.823 |

## Credential types

The following credential types are supported:

- MIFARE Classic®
- MIFARE Plus®
- MIFARE DESFire® EV1
- MIFARE DESFire® EV2

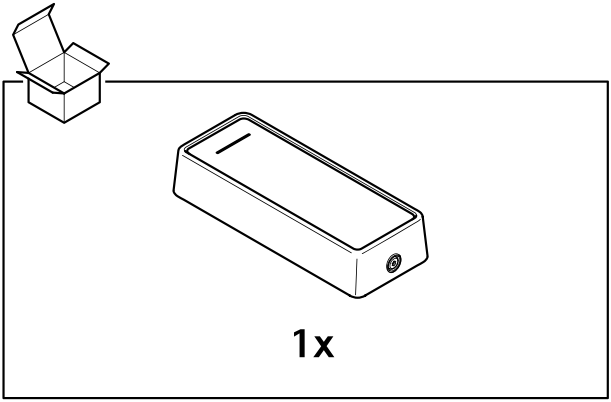
1x

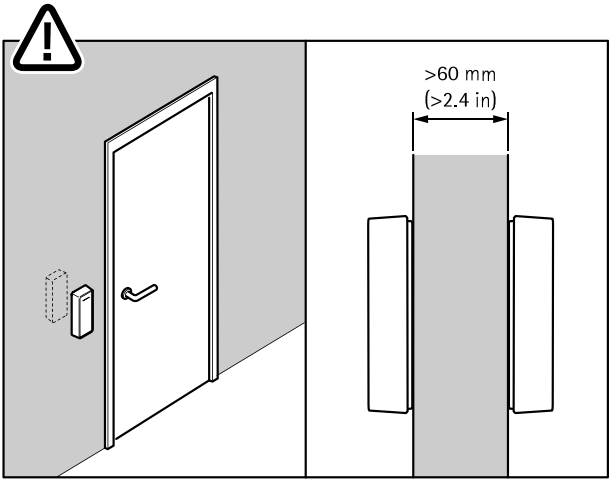
>60 mm
(>2.4 in)

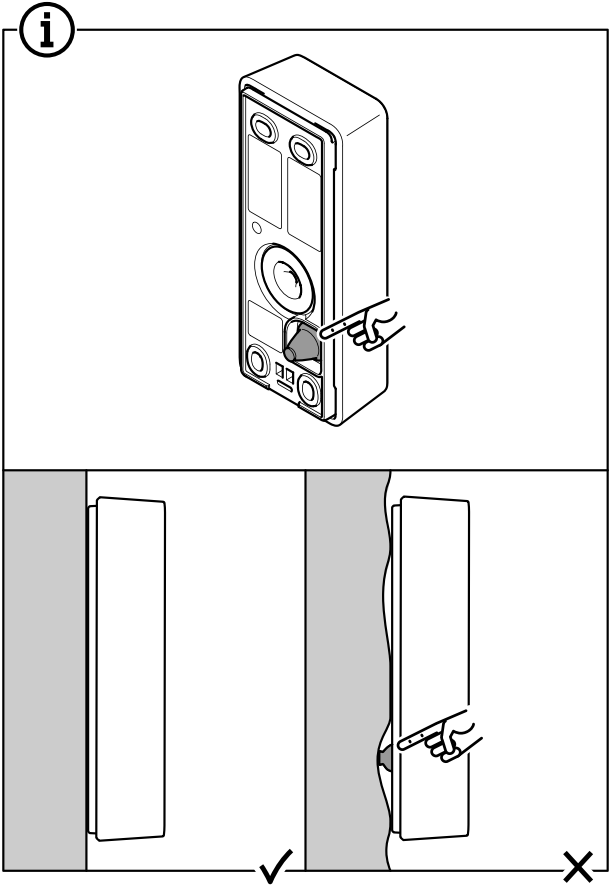

# 1.1

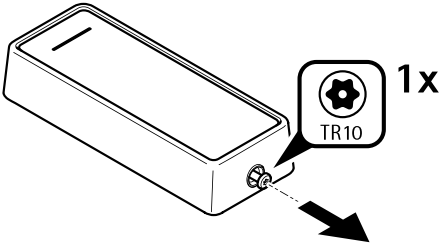


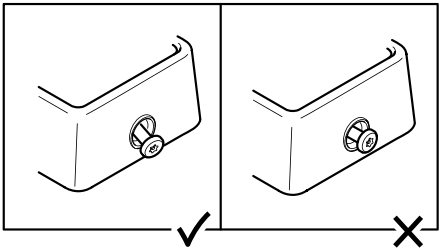

# 1.2

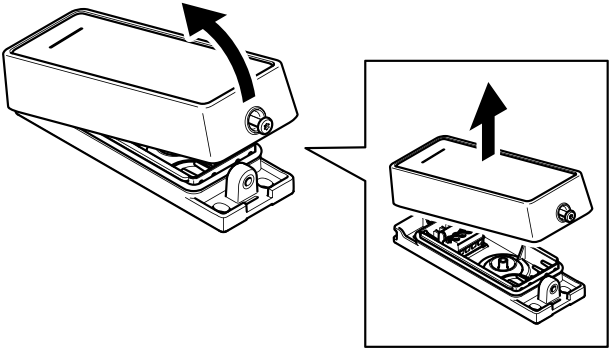

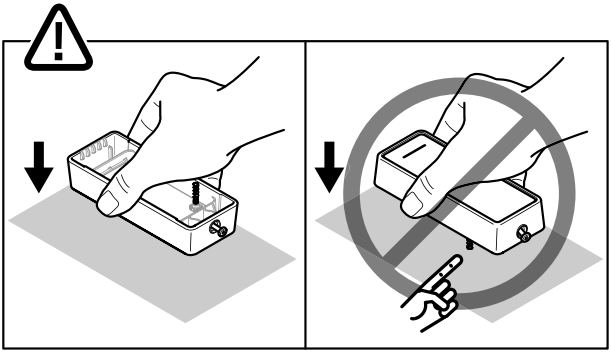

# 1.3

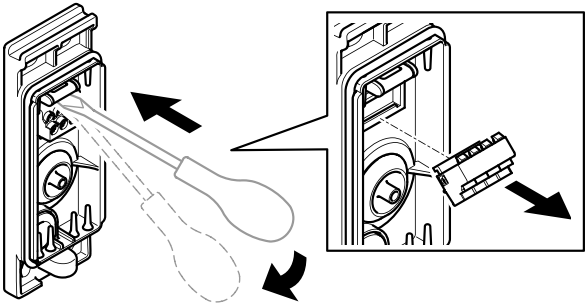

# 1.4

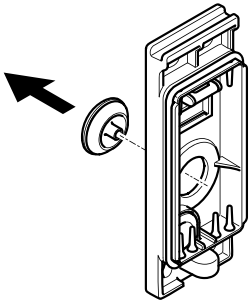

# 1.5

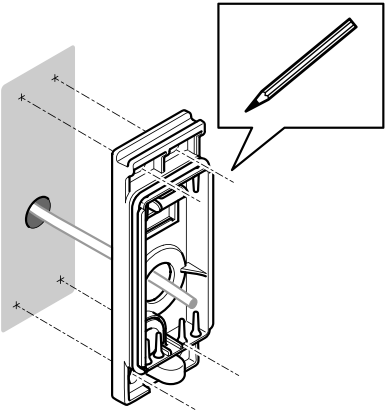

# 1.6

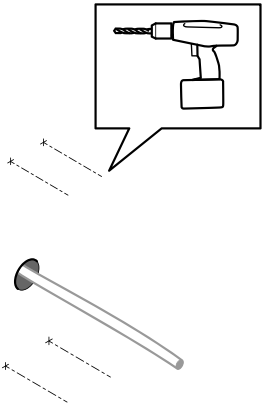

# 1.7

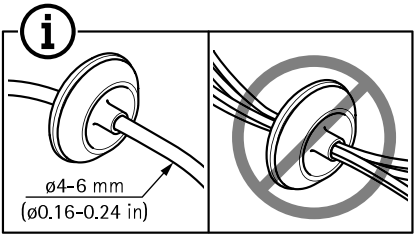


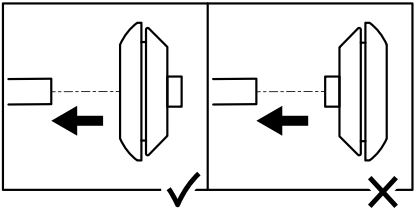

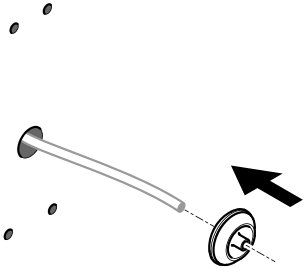

# 1.8

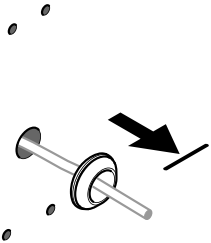

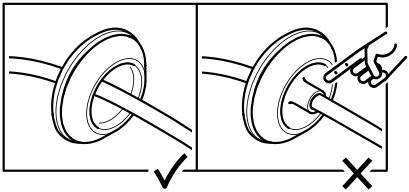

# 1.9

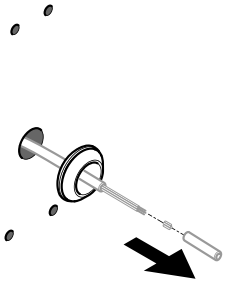

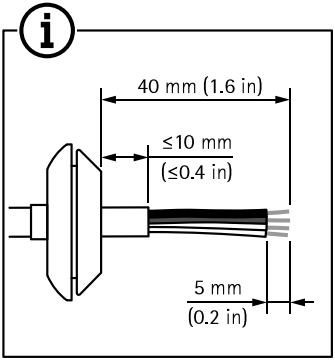


# 1.10

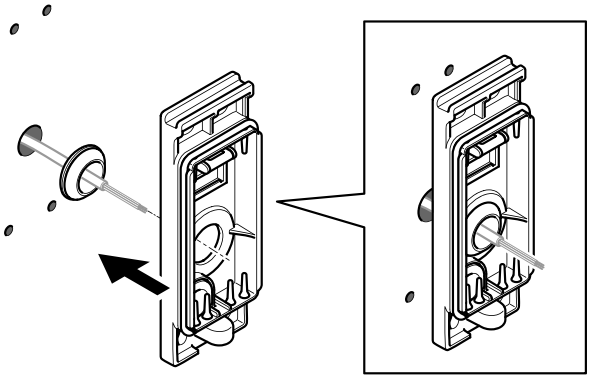

# 1.11

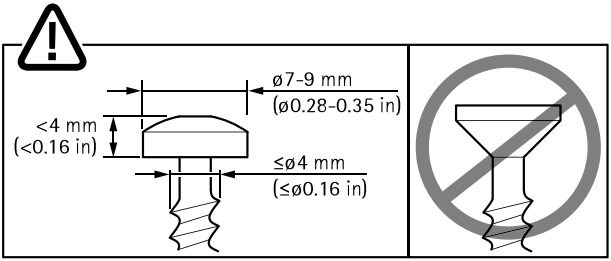


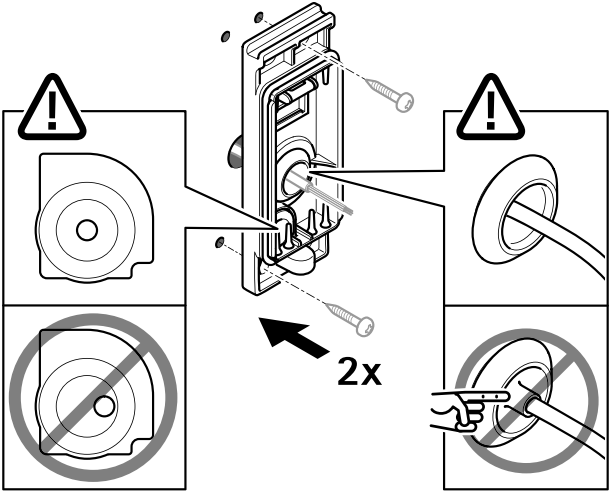

# 1.12

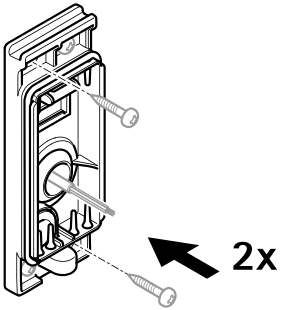


# 1.13

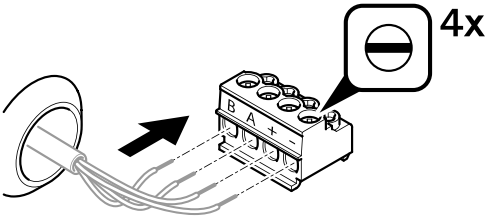

# 1.14

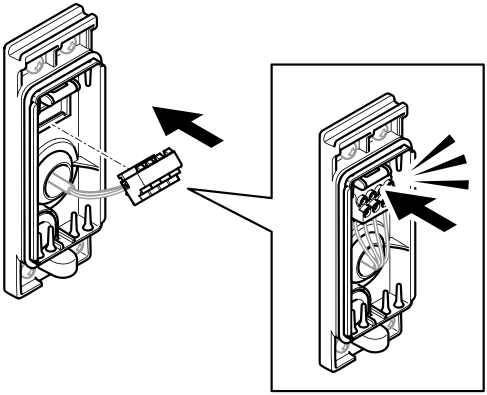

# 1.15

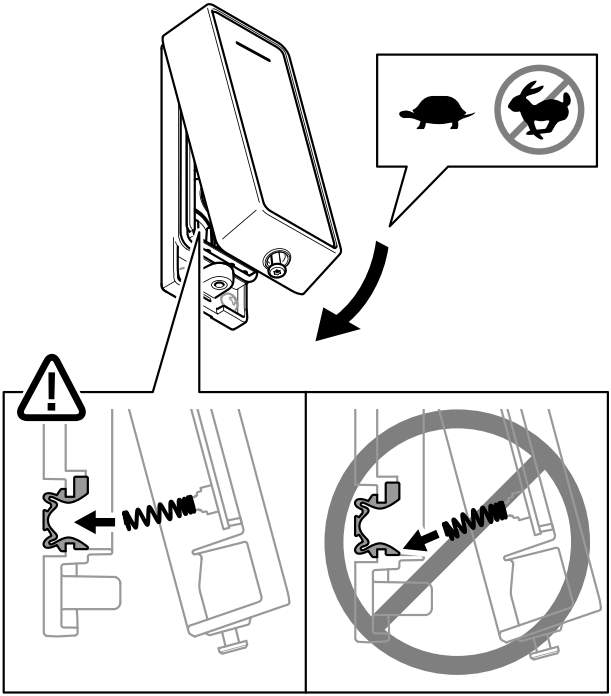

# 1.16

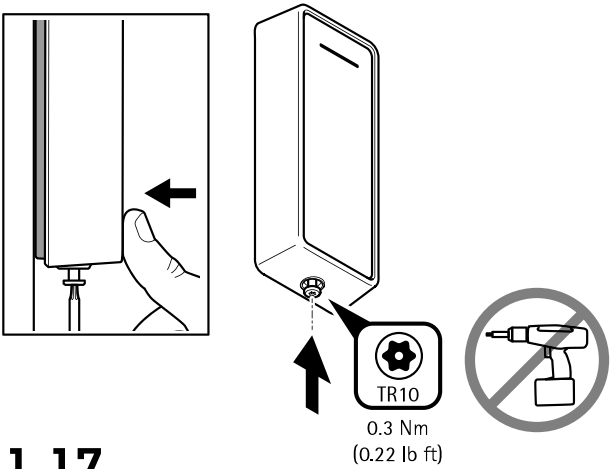


# 1.17

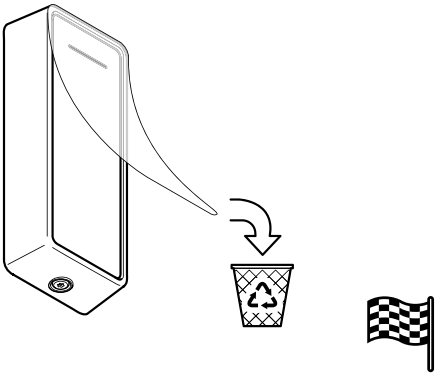

help.axis.com/axis-a4020-e

# English

## Safety information

## Hazard levels

**⚠DANGER**

Indicates a hazardous situation which, if not avoided, will result in death or serious injury.

**⚠WARNING**

Indicates a hazardous situation which, if not avoided, could result in death or serious injury.

**⚠CAUTION**

Indicates a hazardous situation which, if not avoided, could result in minor or moderate injury.

***NOTICE***

Indicates a situation which, if not avoided, could result in damage to property.

## Safety instructions

***NOTICE***

- The Axis product shall be used in compliance with local laws and regulations.
- Store the Axis product in a dry and ventilated environment.
- Avoid exposing the Axis product to shocks or heavy pressure.
- Do not install the product on unstable poles, brackets, surfaces or walls.
- Use only applicable tools when installing the Axis product. Using excessive force with power tools could cause damage to the product.
- Do not use chemicals, caustic agents, or aerosol cleaners.
- Use a clean cloth dampened with pure water for cleaning.
- Use only accessories that comply with the technical specification of your product. These can be provided by Axis or a third party. Axis recommends using Axis power source equipment compatible with your product.
- Use only spare parts provided by or recommended by Axis.
- Do not attempt to repair the product yourself. Contact Axis support or your Axis reseller for service matters.

## Transportation

***NOTICE***

- When transporting the Axis product, use the original packaging or equivalent to prevent damage to the product.

# Français

## Informations sur la sécurité

## Niveaux de risques

**⚠DANGER**

Indique une situation dangereuse qui, si elle n'est pas évitée, entraînera le décès ou des blessures graves.

**⚠AVERTISSEMENT**

Indique une situation dangereuse qui, si elle n'est pas évitée, pourrait entraîner le décès ou des blessures graves.

**⚠ATTENTION**

Indique une situation dangereuse qui, si elle n'est pas évitée, pourrait entraîner des blessures légères ou modérées.

***AVIS***

Indique une situation qui, si elle n'est pas évitée, pourrait endommager l'appareil.

## Consignes de sécurité

***AVIS***

- Le produit Axis doit être utilisé conformément aux lois et règlements locaux.
- Conserver ce produit Axis dans un environnement sec et ventilé.
- Ne pas exposer ce produit Axis aux chocs ou aux fortes pressions.
- Ne pas installer ce produit sur des poteaux, supports, surfaces ou murs instables.
- Utiliser uniquement des outils recommandés pour l'installation de l'appareil Axis. L'application d'une force excessive sur l'appareil avec des outils puissants pourrait l'endommager.
- Ne pas utiliser de produits chimiques, de substances caustiques ou de nettoyants pressurisés.
- Utiliser un chiffon propre imbibé d'eau pure pour le nettoyage.
- Utiliser uniquement des accessoires conformes aux caractéristiques techniques de votre produit. Ils peuvent être fournis par Axis ou un tiers. Axis recommande d'utiliser un équipement d'alimentation Axis compatible avec votre produit.
- Utiliser uniquement les pièces de rechange fournies ou recommandées par Axis.
- Ne pas essayer de réparer vous-même ce produit. Contacter l'assistance technique d'Axis ou votre revendeur Axis pour des problèmes liés à l'entretien.

## Transport

**AVIS**

- Lors du transport du produit Axis, utilisez l'emballage d'origine ou un équivalent pour éviter d'endommager le produit.

# Deutsch

## Sicherheitsinformationen

### Gefährdungsstufen

**⚠GEFAHR**

Weist auf eine gefährliche Situation hin, welche, falls nicht verhindert, zu Tod oder schweren Verletzungen führen kann.

**⚠WARNUNG**

Weist auf eine gefährliche Situation hin, welche, falls nicht verhindert, zu Tod oder schweren Verletzungen führen kann.

**⚠VORSICHT**

Weist auf eine gefährliche Situation hin, welche, falls nicht verhindert, zu geringfügiger oder mäßiger Verletzung führen kann.

**HINWEIS**

Weist auf eine gefährliche Situation hin, welche, falls nicht verhindert, zu Sachschäden führen kann.

## Sicherheitsanweisungen

**HINWEIS**

- Das Axis Produkt muss unter Beachtung der geltenden Gesetze und Bestimmungen betrieben werden.
- Lagern Sie das Axis Produkt in einer trockenen und belüfteten Umgebung.
- Das Axis Produkt weder Stößen noch starkem Druck aussetzen.
- Das Produkt nicht an instabilen Masten, Halterungen, Oberflächen oder Wänden anbringen.
- Verwenden Sie bei der Installation des Axis Produkts ausschließlich passende Werkzeuge. Ein zu großer Kraftaufwand mit elektrischen Werkzeugen kann das Produkt beschädigen.
- Verwenden Sie keine chemischen, ätzenden oder aerosolhaltigen Reinigungsmittel.
- Verwenden Sie zum Reinigen ein sauberes, mit destilliertem Wasser angefeuchtetes Tuch.
- Verwenden Sie nur Zubehör, das den technischen Vorgaben Ihres Produkts entspricht. Dieses ist von Axis oder Drittanbietern erhältlich. Axis empfiehlt die mit Ihrem Produkt kompatible Stromversorgung von Axis.
- Verwenden Sie ausschließlich Ersatzteile die von Axis angeboten oder empfohlen werden.
- Versuchen Sie nicht, dieses Produkt selbsttätig zu reparieren. Wenden Sie sich bezüglich Reparatur und Wartung an den Axis Support oder Ihren Axis Händler.

## Transport

**HINWEIS**

- Bei Bedarf transportieren Sie das Axis Produkt in der Originalverpackung oder einer entsprechenden Verpackung, so dass Schäden vermieden werden.

# Italiano

## Informazioni di sicurezza

### Livelli di pericolo

**⚠PERICOLO**

Indica una situazione pericolosa che, se non evitata, provoca morte o lesioni gravi.

**⚠AVVISO**

Indica una situazione pericolosa che, se non evitata, potrebbe provocare la morte o lesioni gravi.

**⚠ATTENZIONE**

Indica una situazione pericolosa che, se non evitata, potrebbe provocare lesioni medie o minori.

**AVVISO**

Indica una situazione che, se non evitata, potrebbe danneggiare la proprietà.

## Informazioni di sicurezza

**AVVISO**

- Il dispositivo Axis deve essere utilizzato in conformità alle leggi e alle normative locali.
- Conservare il dispositivo Axis in un ambiente asciutto e ventilato.
- Evitare di esporre il dispositivo Axis a urti o pressioni eccessive.
- Non installare il dispositivo su supporti, superfici, pareti o pali instabili.
- Utilizzare solo strumenti applicabili quando si installa il dispositivo Axis. Se si utilizza una forza eccessiva con strumenti

non adatti è possibile causare danni al dispositivo.
- Non utilizzare sostanze chimiche, agenti caustici o detergenti aerosol.
- Utilizzare un panno pulito inumidito in acqua pura per la pulizia.
- Utilizzare solo accessori compatibili con le specifiche tecniche del dispositivo. Questi possono essere forniti da Axis o da terze parti. Axis consiglia l'uso dell'apparecchiatura di alimentazione Axis compatibile con il dispositivo.
- Utilizzare solo parti di ricambio fornite o consigliate da Axis.
- Non tentare di riparare il dispositivo da soli. Contattare l'assistenza o il rivenditore Axis per questioni relative alla manutenzione.

### Trasporto

**AVVISO**

- Durante il trasporto del dispositivo Axis, utilizzare l'imballaggio originale o equivalente per evitare danni al dispositivo.

# Español

## Información de seguridad

### Niveles de peligro

**⚠PELIGRO**

Indica una situación peligrosa que, si no se evita, provocará lesiones graves o la muerte.

**⚠ADVERTENCIA**

Indica una situación peligrosa que, si no se evita, puede provocar lesiones graves o la muerte.

**⚠PRECAUCIÓN**

Indica una situación peligrosa que, si no se evita, puede provocar lesiones moderadas o leves.

**AVISO**

Indica una situación peligrosa que, si no se evita, puede provocar daños materiales.

### Instrucciones de seguridad

**AVISO**

- Este producto de Axis debe utilizarse de acuerdo con las leyes y normativas locales.
- Almacene el producto de Axis en un entorno seco y ventilado.
- Evite la exposición del producto de Axis a choques o a una fuerte presión.
- No instale el producto en postes, soportes, superficies o paredes inestables.
- Utilice solo las herramientas correspondientes cuando instale el producto de Axis. La aplicación de una fuerza excesiva con herramientas eléctricas puede provocar daños en el producto.
- No utilice limpiadores en aerosol, agentes cáusticos ni productos químicos.
- Limpie con un paño limpio humedecido con agua pura.
- Utilice solo accesorios que cumplan con las especificaciones técnicas de su producto. Estos accesorios los puede proporcionar Axis o un tercero. Axis recomienda utilizar un equipo de suministro de alimentación de Axis compatible con su producto.
- Utilice solo piezas de repuesto proporcionadas o recomendadas por Axis.
- No intente reparar el producto usted mismo. Póngase en contacto con el servicio de asistencia técnica de Axis o con su distribuidor de Axis para tratar asuntos de reparación.

### Transporte

**AVISO**

- Cuando transporte el producto de Axis, utilice el embalaje original o un equivalente para evitar daños en el producto.

# 日本語

## 安全情報

### 危険レベル

**⚠危険**

回避しない場合、死亡または重傷につながる危険な状態を示します。

**⚠警告**

回避しない場合、死亡または重傷につながるおそれのある危険な状態を示します。

**⚠注意**

回避しない場合、軽傷または中程度の怪我につながるおそれのある危険な状態を示します。

**注意**

回避しない場合、器物の破損につながるおそれのある状態を示します。

## 安全手順

**注意**

- 本製品は、お使いになる地域の法律や規制に準拠して使用してください。
- 本製品は乾燥した換気のよい環境に保管してください。
- 本製品に衝撃または強い圧力を加えないでください。
- 本製品を不安定なポール、ブラケット、表面、または壁に設置しないでください。
- 本製品を設置する際には、適切な工具のみを使用してください。 電動工具を使用して過剰な力をかけると、製品が損傷することがあります。
- 化学薬品、腐食剤、噴霧式クリーナーは使用しないでください。
- 清掃には、きれいな水に浸した清潔な布を使用してください。
- 製品の技術仕様に準拠したアクセサリーのみを使用してください。 これらのアクセサリーは、Axisまたはサードパーティから入手できます。 Axisは、ご使用の製品と互換性のあるAxis給電ネットワークスイッチの使用を推奨します。
- Axisが提供または推奨する交換部品のみを使用してください。
- 製品を自分で修理しないでください。 修理については、Axisサポートまたは販売代理店にお問い合わせください。

## 輸送

**注意**

- 本製品を運搬する際は、製品が損傷しないよう、元の梱包か同等の梱包を使用してください。

# Português

## Informações sobre segurança

## Níveis de perigo

**⚠PERIGO**

Indica uma situação perigosa que, se não evitada, irá resultar em morte ou lesões graves.

**⚠AVISO**

Indica uma situação perigosa que, se não evitada, poderá resultar em morte ou lesões graves.

**⚠CUIDADO**

Indica uma situação perigosa que, se não evitada, poderá resultar em lesões leves ou moderadas.

***OBSERVAÇÃO***

Indica uma situação perigosa que, se não evitada, poderá resultar em danos à propriedade.

## Instruções de segurança

***OBSERVAÇÃO***

- O produto Axis deve ser usado em conformidade com as leis e regulamentações locais.
- Armazene o produto Axis em um ambiente seco e ventilado.
- Evite expor o produto Axis a impactos ou pressão elevada.
- Não instale o produto em suportes, mastros, superfícies ou paredes instáveis.
- Use apenas as ferramentas recomendadas ao instalar o produto Axis. O uso de força excessiva com ferramentas elétricas poderia danificar o produto.
- Não use produtos químicos, agentes cáusticos ou limpadores aerossóis.
- Use um pano limpo úmido para limpar o produto.
- Utilize apenas acessórios que atendam às especificações técnicas do produto. Esses poderão ser fornecidos pela Axis ou por terceiros. A Axis recomenda usar equipamento de fonte de alimentação Axis compatível com seu produto.
- Utilize apenas peças sobressalentes fornecidas ou recomendadas pela Axis.
- Não tente reparar o produto por conta própria. Entre em contato com o suporte ou seu revendedor Axis para quaisquer questões relacionadas a serviços.

## Transporte

***OBSERVAÇÃO***

- Ao transportar o produto Axis, use a embalagem original ou equivalente para evitar danos ao produto.

# РУССКИЙ

## Сведения по безопасности

## Уровни опасности

**⚠ОПАСНО**

Опасная ситуация, которая, если ее не устранить, приведет к смерти или опасным травмам.

**⚠ВНИМАНИЕ!**

Опасная ситуация, которая, если ее не устранить, может привести к смерти или опасным травмам.

**⚠ОСТОРОЖНО**

Опасная ситуация, которая, если ее не устранить, может привести к травмам незначительной или средней тяжести.

***ПРИМЕЧАНИЕ.***

Опасная ситуация, которая, если ее не устранить, может вызвать повреждение имущества.

## Правила безопасности

***ПРИМЕЧАНИЕ.***

- Это изделие Axis следует использовать в соответствии с местными законами и нормативами.
- Устройство Axis должно храниться в сухом, хорошо проветриваемом помещении.
- Не допускайте ударов или приложения высокого давления к устройству Axis.
- Не монтируйте устройство на неустойчивых столбах, кронштейнах, поверхностях или стенах.
- При установке устройства Axis используйте только предназначенные для этого инструменты. Приложение чрезмерных усилий к инструментам может привести к повреждению устройства.
- Не используйте химикалии, едкие вещества или аэрозольные очистители.
- Для очистки используйте чистую ткань, смоченную чистой водой.
- Используйте только принадлежности, которые соответствуют техническим характеристикам данного устройства. Они могут поставляться компанией Axis или сторонним производителем. Компания Axis рекомендует использовать блоки питания Axis, совместимые с устройством.
- Используйте только запасные части, поставляемые или рекомендованные компанией Axis.
- Не пытайтесь отремонтировать устройство самостоятельно. По вопросам обслуживания обращайтесь в службу поддержки Axis или к своему реселлеру Axis.

## Транспортировка

***ПРИМЕЧАНИЕ.***

- При транспортировке устройства Axis используйте оригинальную упаковку или ее эквивалент во избежание повреждения изделия.

# 中文

## 安全信息

## 危险等级

**⚠危险**

表示如果不避免则会导致死亡或严重伤害的危险情况。

**⚠警告**

表示如果不避免则可能导致死亡或严重伤害的危险情况。

**⚠警示**

表示如果不避免则可能导致轻微或中度伤害的危险情况。

**注意**

表示如果不避免则可能导致财产损失的情况。

## 安全说明

**注意**

- 使用 Axis 产品时应遵守当地法律和法规。
- 在干燥通风的环境中存放 Axis 产品。
- 避免将 Axis 产品暴露在冲击或高压环境下。
- 请勿将产品安装在不稳固的立杆、支架、表面或墙壁上。
- 安装 Axis 产品时，仅使用适用的工具。使用电动工具过度施力可能导致产品损坏。
- 请勿使用化学品、腐蚀剂或气雾剂。
- 使用蘸纯净水的干净布进行清洁。
- 仅使用符合产品技术规格的附件。这些附件可由 Axis 或第三方提供。Axis 推荐使用与产品兼容的 Axis 电源设备。
- 仅使用 Axis 提供或推荐的备件。
- 请勿尝试自行维修产品。有关服务事项，请联系 Axis 支持部门或 Axis 经销商。

## 运输

**注意**

- 安讯士产品运输途中，应使用其原包装或等效包装，以防对产品造成损坏。

# 한국어

## 안전 정보

## 위험 레벨

**⚠위험**

피하지 못한 경우 사망이나 심각한 부상이 발생하는 위험한 상황을 나타냅니다.

**⚠경고**

피하지 못한 경우 사망이나 심각한 부상이 발생할 수 있는 위험한 상황을 나타냅니다.

**⚠주의**

피하지 못한 경우 경미하거나 심하지 않은 부상이 발생할 수 있는 위험한 상황을 나타냅니다.

**통지**

피하지 못한 경우 재산상 손해가 발생할 수 있는 상황을 나타냅니다.

## 안전 지침

**통지**

- Axis 제품은 해당 지역 법률 및 규정을 준수하여 사용해야 합니다.
- Axis 제품은 건조하고 환기가 잘 되는 곳에 보관하십시오.
- Axis 제품에 충격이나 강한 압력을 가하지 마십시오.
- 불안정한 폴, 브래킷, 표면 또는 벽면에 제품을 설치하지 마십시오.
- Axis 제품을 설치할 경우 해당 도구만 사용하십시오. 전동 공구로 과도한 힘을 사용하면 제품에 손상을 줄 수 있습니다.
- 화학 물질, 부식제, 에어로졸 세척제를 사용하지 마십시오.
- 깨끗한 물에 적신 깨끗한 천을 사용하여 닦으십시오.
- 제품의 기술적 사양을 준수하는 액세서리만 사용하십시오. 이러한 액세서리는 Axis 또는 제3자가 제공할 수 있습니다. Axis는 귀하의 제품과 호환되는 Axis 전원 장비 사용을 권합니다.
- Axis가 공급하거나 추천하는 예비 부품만 사용하십시오.
- 제품을 직접 수리하려고 하지 마십시오. 서비스 문제에 대해 Axis 지원 부서 또는 Axis 리셀러에 문의하십시오.

## 운반

**통지**

- Axis 제품을 운반할 때는 원래 포장이나 이에 준하는 포장을 사용해 제품이 손상되지 않도록 하십시오.

# 繁體中文

## 安全資訊

## 危險等級

**⚠危險**

表示如果不避免，此危險情況會導致死亡或嚴重傷害。

**⚠警告**

表示如果不避免，此危險情況可能導致死亡或嚴重傷害。

**⚠小心**

表示如果不避免，此危險情況可能導致輕度或中度傷害。

**注意**

表示如果不避免，此情況可能導致財產損壞。

## 安全指示

**注意**

- Axis 產品的使用應符合當地法規。
- 請將 Axis 產品存放在乾燥且通風良好的環境中。
- 避免讓 Axis 產品受到衝擊或重壓。
- 請勿將產品安裝在不穩定的圓柱、支架、表面或牆壁上。
- 安裝 Axis 產品時，僅可使用適合的工具。 使用電動工具時，過度施力可能會造成產品損壞。
- 請勿使用化學品、鹼劑或噴霧清潔劑。
- 使用以純水沾濕的乾淨布料進行清潔。
- 所有配件必須符合產品的技術規格。可由 Axis 或第三方供應商提供。 Axis 建議使用相容於產品的 Axis 電源設備。
- 只使用 Axis 提供或推薦的備用零件。
- 請勿嘗試自行修理產品。 請向 Axis 技術支援人員或 Axis 經銷商洽詢維修事宜。

## 運輸

**注意**

- 當運送安迅士產品時，請使用原包裝或有相同保護效果的包裝，以防止產品損壞。

Installation Guide
AXIS A4020-E Reader
© 2021 Axis Communications AB
Ver. M4.2
Date: December 2021
Part No. 2341126